SHEET OF

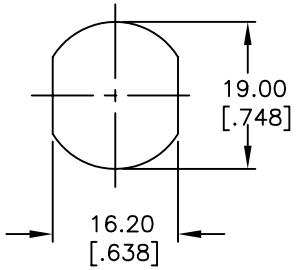

RECOMMENDED PANEL LAYOUT

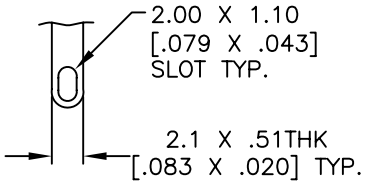

TERMINAL DETAIL
SCALE 2X

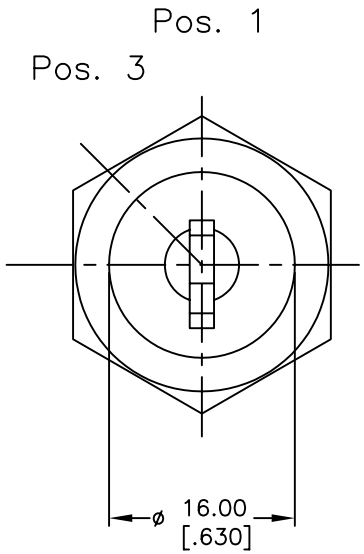

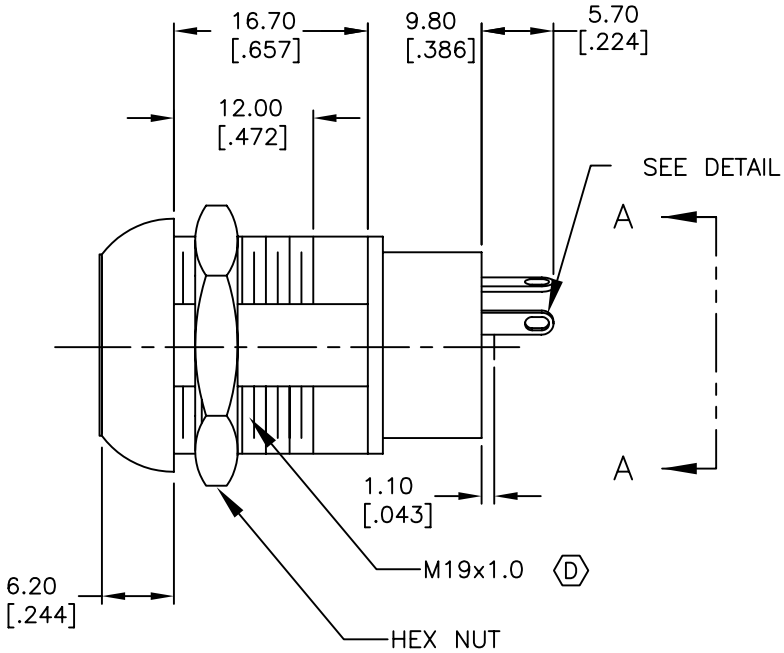

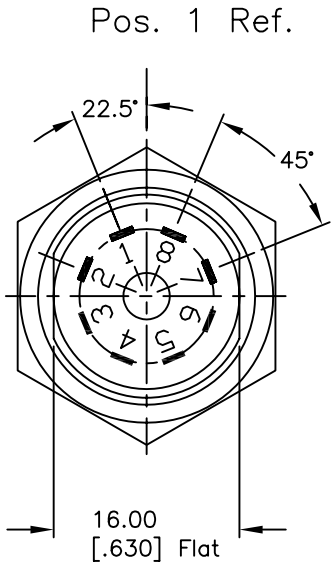

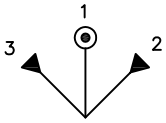

CIRCUIT: DP (45° INDEXING)
CONTACT CONFIGURATION

SWITCH FUNCTION		
CONNECTED TERMINAL #		
POS. 1	POS. 2	POS. 3
8-1,4-5	1-2,5-6	8-7,3-4

NOTES:
1. ALL DIMENSIONS IN MM [INCH]
2. GENERAL TOLERANCE: X.X=±0.4
   X.XX=±0.25
3. TERM. NOS. FOR REF. ONLY
4. CONTACT RATING: 4A @125VAC/28VDC, 2A @250VAC
5. DIELECTRIC STRENGTH: 1500VAC–1 min.
6. ELECTRICAL LIFE: 10,000 make–and–break cycles at full load.
7. MATERIALS:
   CONTACTS: Silver Plated CU (Q Contact material)
   TERMINALS: Silver Plated Cu (Q Contact material)
   MOUNTING NUT: Nickel Plated zinc alloy
   CONTACT SPRING: Piano Wire
   KEYS: (QTY. 2) Brass with code no. A126
   LOCK: Bright NI plated zinc alloy with NI facing
   TUMBLER Mechanism: 4–disc tumbler cylinder.
8. 2002/95/EC (ROHS) COMPLIANT

LEGEND
● =Detent Positions (45°)
◉ =Key pull possible in these positions
▲ =MOMENTARY POS.

REV.	ECN No.	DESCRIPTION	DATE	CHKD
D	19509	CHANGED THREAD DESCRIPTION	12/08/10	BGL
C	16963	FIXED SWITCH FUNCTION	2/5/07	TN
B	15031	UPDATED DRAWING	6/24/05	JB
A	11566	RELEASED FOR PRODUCTION	7/12/01	CJB

THE INFORMATION CONTAINED IN THIS DOCUMENT IS PROPRIETARY TO E-SWITCH AND IS NOT TO BE COPIED OR TRANSFERRED

E-SWITCH®

TITLE K0129D-A126

SCALE	DATE	DR	DWG	REV
1:1	2/5/2007	TN	K200308	D