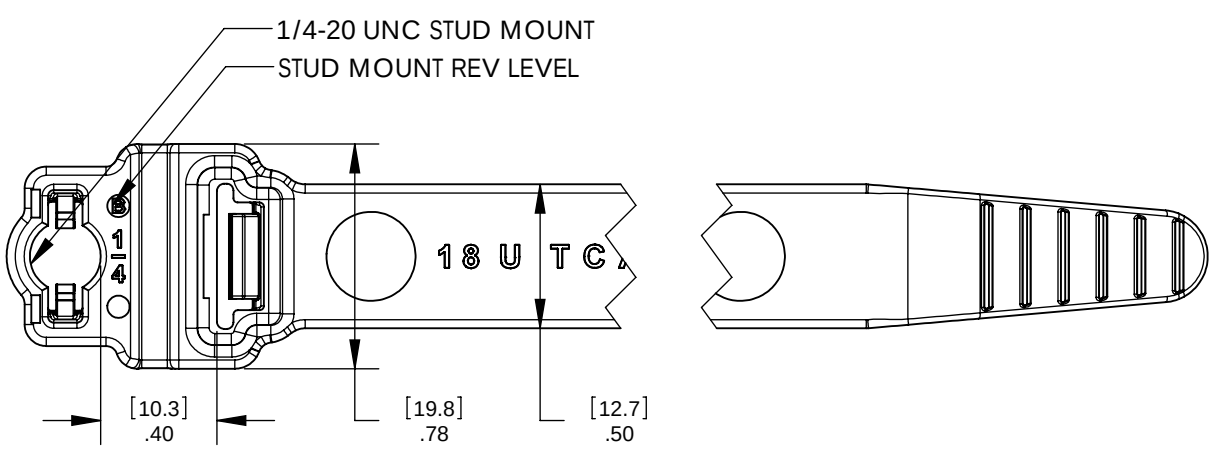


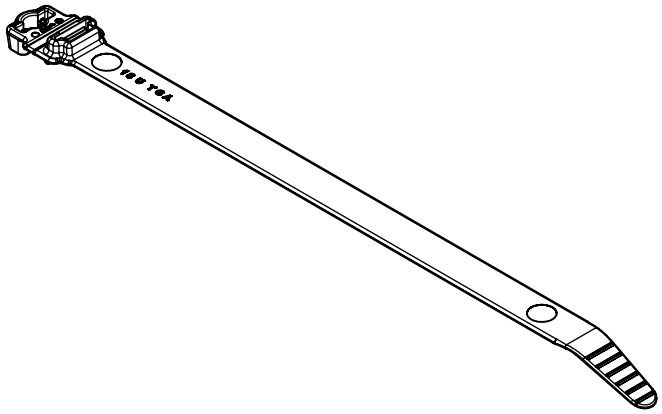

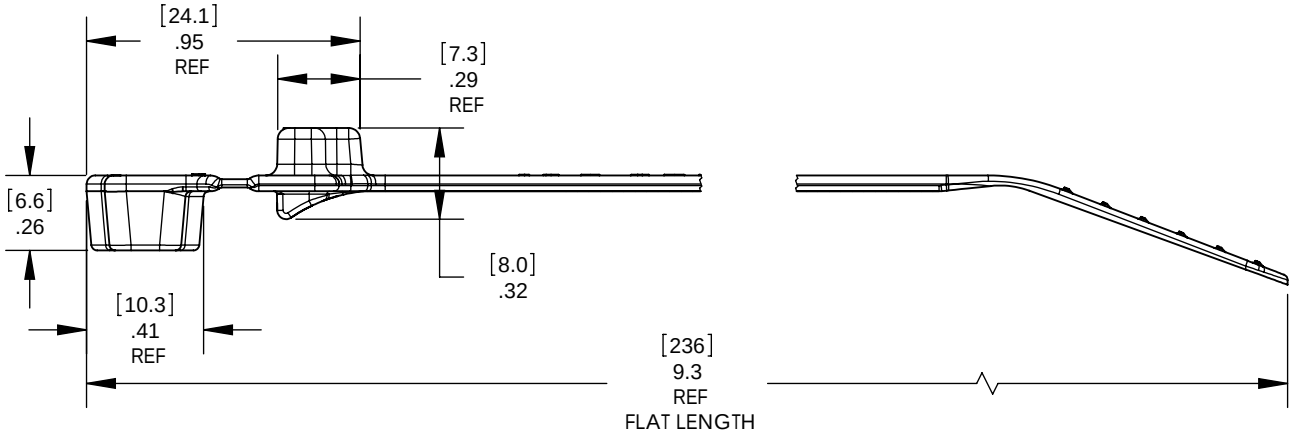


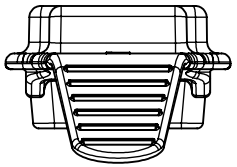

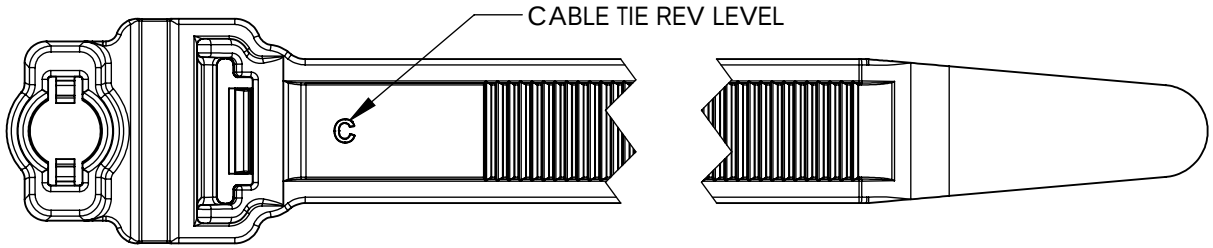


04 **PERFORMANCE REQUIREMENTS (DAM):**

1. .25" STUD PUSH ON FORCE: 20LBS MAX
2. .25" STUD PULL OFF FORCE: 40LBS MIN
3. CABLE TIE TENSILE STRENGTH: 120LBS MIN
4. MINIMUM BUNDLE DIAMETER: .375"
5. MAXIMUM BUNDLE DIAMETER: 2.25"

**INVENTORS**

HellermannTyton®

ALL PROPRIETARY RIGHTS IN THE SUBJECT MATTER SHOWN ON THIS DRAWING ARE EXCLUSIVE PROPERTY OF HELLERMANNTYTON

| name | date | city, state |
|---|---|---|
| | | |

**REVISION**

| | |
|---|---|
| level | 04 |
| by | JJP |
| date | 08/25/2008 |
| ECN # | 010951 |
| part level | A/C |

**DIMENSIONS**

TOLERANCES
.XXXX = [±.127]/±0.005
.XXX = [±.25]/±0.01
.XX = [±.5]/±0.02
.X = [±6.4]/±0.25
∠ = ±0.5°
unless otherwise specified

units [milimeters]/inches

**PART**

| | | | |
|---|---|---|---|
| number | WSS250 | phase | Production |
| name | WIDE STRAP TIE W/ .25" STUD MOUNT | | |
| material | NYLON 6/6, IMHSUV BLACK | | |

**DRAWING**

| | | | |
|---|---|---|---|
| format version N | AH | CAD | SW 2007 |
| scale | 3:2 | | |
| computer file name | CT06-026-002CST_04 | previous drawing number | |
| drawn | JJP 01/16/2007 | checked | GGG 08/09/2007 |
| approved | | | |
| type | Customer | | sheet 1 of 1 |
| number | **CT06-026-002CST** | | |