PART NUMBER	ITEM ① BODY	ITEM ② CONTACT	ITEM ③ INSULATOR	ITEM ④ INSULATOR	ITEM ⑤ CLAMP STEM	ITEM ⑥ CLAMP CONE	ITEM ⑦ CLAMP NUT
142-0103-401	BRASS GOLD PL .00001 MIN OVER NICKEL PL .00005 MIN OVER COPPER PL .00005 MIN	BERYLLIUM COPPER GOLD PL .00005 MIN OVER NICKEL PL .00005 MIN OVER COPPER PL .00005 MIN	TEFLON	TEFLON	BRASS GOLD PL .00001 MIN OVER NICKEL PL .00005 MIN OVER COPPER PL .00005 MIN	BRASS GOLD PL .00001 MIN OVER NICKEL PL .00005 MIN OVER COPPER PL .00005 MIN	BRASS GOLD PL .00001 MIN OVER NICKEL PL .00005 MIN OVER COPPER PL .00005 MIN
142-0103-406	BRASS NICKEL PL .0001 MIN OVER COPPER PL .00005 MIN	BERYLLIUM COPPER GOLD PL .00005 MIN OVER NICKEL PL .00005 MIN OVER COPPER PL .00005 MIN	TEFLON	TEFLON	BRASS NICKEL PL .0001 MIN OVER COPPER PL .00005 MIN	BRASS NICKEL PL .0001 MIN OVER COPPER PL .00005 MIN	BRASS NICKEL PL .0001 MIN OVER COPPER PL .00005 MIN

PART NUMBER	ITEM ⑧ FLAT WASHER	ITEM ⑨ NUT
142-0103-401	BRASS GOLD PL .00001 MIN OVER NICKEL PL .00005 MIN OVER COPPER PL .00005 MIN	BRASS GOLD PL .00001 MIN OVER NICKEL PL .00005 MIN OVER COPPER PL .00005 MIN
142-0103-406	BRASS NICKEL PL .0001 MIN OVER COPPER PL .00005 MIN	BRASS NICKEL PL .0001 MIN OVER COPPER PL .00005 MIN

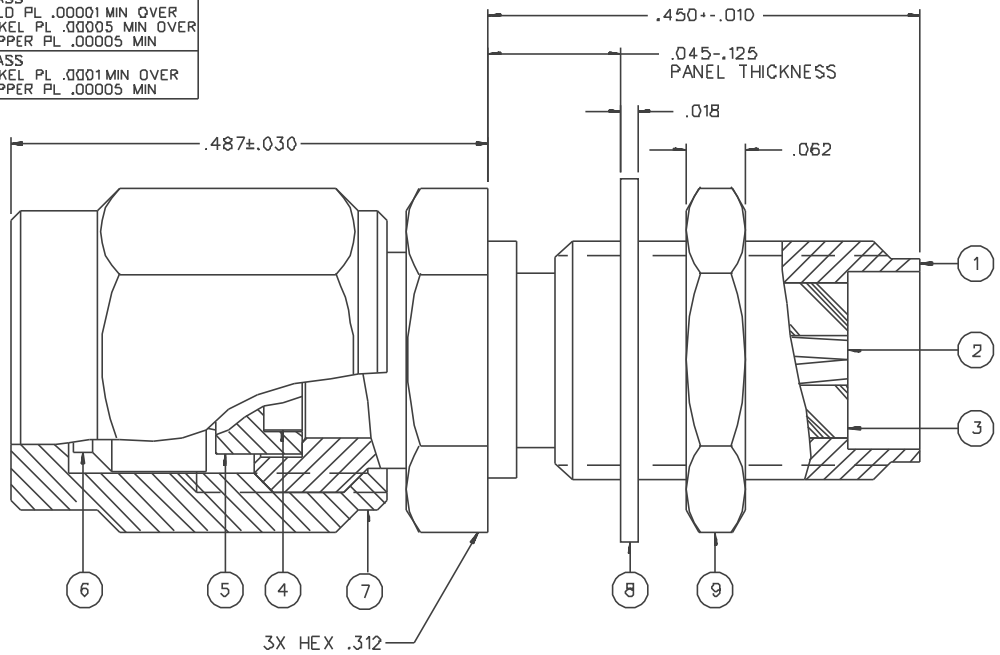

NOTES:

1. SPECIFICATIONS:

IMPEDANCE: 50 OHMS
FREQUENCY RANGE: 0-12.4 GHz
VSWR: 1.15+.02 F MAX (F IN GHz)
WORKING VOLTAGE: 250 VRMS MAX AT SEA LEVEL
DIELECTRIC WITHSTANDING VOLTAGE: 750 VRMS MIN AT SEA LEVEL
INSULATION RESISTANCE: 5000 MEGOHM MIN
CONTACT RESISTANCE:
CENTER CONTACT - INITIAL 3.0 MILLIOHM MAX, AFTER ENVIRONMENTAL 4.0 MILLIOHM MAX
OUTER CONDUCTOR - INITIAL 2.0 MILLIOHM MAX AFTER ENVIRONMENTAL NOT APPLICABLE
BODY TO CABLE - 0.5 MILLIOHM MAX (GOLD PLATED) 5.0 MILLIOHM MAX (NICKEL PLATED)
CORONA LEVEL: 190 VOLTS MIN AT 70,000 FEET
INSERTION LOSS: .06 F MAX (F IN GHz) AT 6 GHz
RF LEAKAGE: -60 DB MIN AT 2 TO 3 GHz
RF HIGH POTENTIAL WITHSTANDING VOLTAGE: 500 VRMS MIN AT 4 AND 7 MHz

MECHANICAL:

ENGAGE/DISENGAGE TORQUE: 2 INCH-POUNDS MAX
MATING TORQUE: 7-10 INCH POUNDS
COUPLING PROOF TORQUE: NOT APPLICABLE
COUPLING NUT RETENTION: NOT APPLICABLE
CONTACT RETENTION: 6 LBS MIN AXIAL FORCE
CABLE ACCEPTABILITY: RG 188/U, RG 316/U, RG 161/U, RG 174/U
CABLE HEX CRIMP SIZE: NOT APPLICABLE
CABLE RETENTION: 20 LBS MIN AXIAL FORCE
DURABILITY: 500 CYCLES MIN

ENVIRONMENTAL:

(MEETS OR EXCEEDS THE APPLICABLE PARAGRAPH OF MIL-C-39012)
THERMAL SHOCK: MIL-STD-202, METHOD 107, CONDITION B, EXCEPT +85 DEG C HIGH TEMP
OPERATING TEMPERATURE: -65 DEG C TO 165 DEG C
CORROSION: MIL-STD-202, METHOD 101, CONDITION B
SHOCK: MIL-STD-202, METHOD 213, CONDITION I
VIBRATION: MIL-STD-202, METHOD 204, CONDITION D
MOISTURE RESISTANCE: MIL-STD-202, METHOD 106

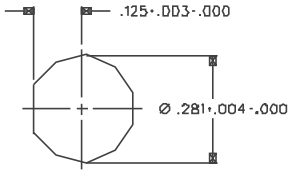

MOUNTING HOLE

4:1

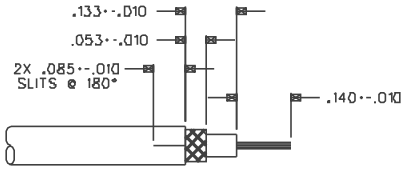

CABLE STRIP DIMENSIONS

4:1

DRAWING NO. C - 142-0103-401/410

0	REVISIONS		
ENGINEERING RELEASE			
1	9-5-90		9-17-90 ECO 24895
CHANGED: UPDATED GRAPHICS			
* REVISION NUMBER FOLLOWED BY AN ALPHA * CHARACTER INDICATES DRAWING CLARIFICATION OR PART NUMBER ADDITION ONLY. *			
1a	4-13-95	RH	ECN 43310

CUSTOMER DRAWING

THIS DRAWING TO BE INTERPRETED PER ANSI Y 14.5M - 1982

"μSTATION"

COMPANY CONFIDENTIAL

TOLERANCE UNLESS OTHERWISE SPECIFIED		DRAWN BY EJ	DATE 6-14-90	JOHNSON Cinch connectivity solutions brand	Cinch Connectivity Solutions 299 Johnson Ave. Ste. 100 Waseca, MN 56093 1-800-247-8256
DECIMALS .XX	mm	CHECKED BY	DATE	TITLE	JACK ASSEMBLY STRAIGHT CABLED BULKHEAD SMA, RG 316
.XXX REF		APPROVED BY TAK	DATE 9-5-90		
MATL		APPROVED BY RJB	DATE 9-14-90	CODE NO.	DRAWING NO. C - 142-0103-401/410
FINISH		RELEASE DATE 9-17-90		SCALE 10:1	U/M INCH SHEET 2 OF 2