THIS DRAWING IS UNPUBLISHED. RELEASED FOR PUBLICATION 20
© COPYRIGHT 20 BY TYCO ELECTRONICS CORPORATION. ALL RIGHTS RESERVED.

PART NUMBER	REV	FIRST USED	POWER UNIT	FEED TYPE	DESCRIPTION
1855043-1	A	122500-1	LEADMAKER	POST FEED	CUTS CARRIER
1855043-2	A	565435-5	BENCH MODEL K	PRE FEED	CUTS CARRIER
1855043-3	A	354500-1	BENCH MODEL G	PRE FEED	CUTS CARRIER
1855043-6	A	122500-1	LEADMAKER	POST FEED	CONTINIOUS CARRIER
7-1855043-7	A	-	-	-	SPARE PARTS

△1 RECOMMENDED SPARE PARTS
△2 GREASE LIGHTLY
△3 GUARD MUST BE IN PLACE WHEN OPERATING APPLICATOR IN A BENCH MACHINE

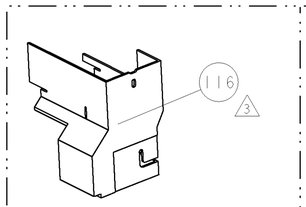

AMP-O-LECTRIC TERM GUARD

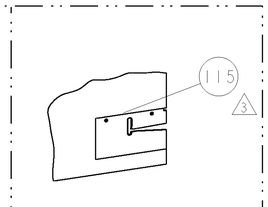

G TERMINATOR GUARD

TERMINAL NAME: WIRE SNAP ON FEMALE

AMP PN	-	AMP TERMINAL - AMP CRIMP SPECS			
3-1438230-4	-				
-	-	REF SETTINGS	CRIMP HEIGHT		WIRE SIZE
-	-	C3	.059±.002[1.50±0.05mm]		18 AWG
-	-	D0	.055±.002[1.40±0.05mm]		20 AWG
-	-	-	-		-
-	-	-	-		-
-	-	CRIMP	SIZE	TYPE	RANGE
-	-				
-	-	WIRE	.080 [2.03mm]	F	20-18 AWG
-	-	INSUL	.090 [2.29mm]	O	Ø.090 MAX

WIRE STRIP LENGTH	TERM APPL SPEC	FEED	APPL INSTRUCTIONS	SET UP GAGE
.202 -.232	NONE	.731	408-8040	458637-1

LOC	DIST
A	66

REVISIONS

P	LTR	DESCRIPTION	DATE	DWN	APVD
	A	RELEASED	31MAR2006	RK	TE

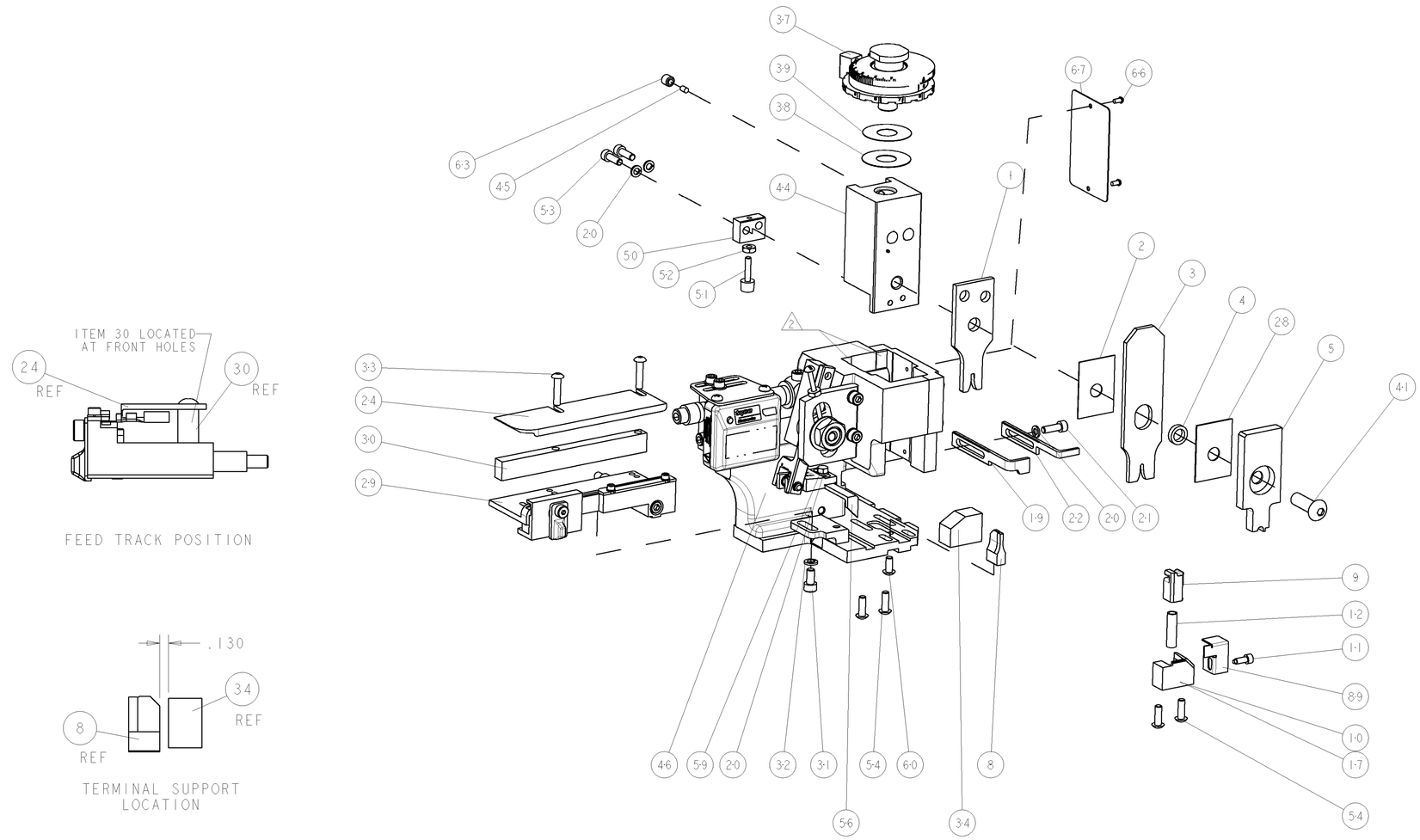

△3	-	-	-	REF	-		..	455749-1	GUARD WINDOW	116
△3	-	-	REF	-	-		..	679532-1	INSERT, GUARD	115
	-	1	1	1	1		-	1-21002-7	SCR, BTN SKT HD CAP 6-32 X .375	91
	-	1	1	1	1		-	318563-1	GUARD, FRONT CHIP	89
	-	1	1	1	1		-	4088040	SF APPL INST 408-8040	72
	-	1	1	1	1		-	217238-1	GENERAL INSTRUCTION PKG	71
	-	1	1	1	1		-	461264-5	PLATE, IDENTIFICATION	67
	-	2	2	2	2		-	21017-2	SCREW, DRIVE	66
	-	1	1	1	1		-	21009-2	SCR, SET, SELF LOCKING 1/4-20 X .250	63
	-	1	1	1	1		-	22733-8	SCR, BHSC, SELF-LOCKING, 8-32 X .375	60
	-	1	1	1	1		-	2-22603-0	SCR, HEX HD CAP 8-32 X .312	59
	-	1	1	1	1		-	458537-2	PAWL, FEED	56
	-	4	4	4	4		-	2-21002-2	SCR, BTN SKT HD CAP 8-32 X .500	54
	-	2	2	2	2		-	2-21000-7	SCR, SKT HD CAP 8-32 X .500	53
	-	1	1	1	1		-	21018-5	NUT, HEX, REG 6-32	52
	-	1	1	1	1		-	811242-2	BUMPER, HOLD DOWN	51
	-	1	1	1	1		-	690753-1	SPACER, TONKER	50
	-	-	1	-	-		..	690602-6	CAM, PRE FEED, 1 5/8	49
	-	-	-	1	-		..	690602-5	CAM, PRE FEED, 1 1/8	48
	-	1	-	-	1		-	690501-4	CAM, POST FEED, 1 5/8	47
	-	1	1	1	1		-	459456-1	APPL. BASIC SUB ASSY (SIDE WISE MOCA)	46
	-	1	1	1	1		-	690191-1	PLUG,NYLON	45
	-	1	1	1	1		-	455673-1	RAM, SIDE FEED	44
	-	1	1	1	1		-	7-21002-9	SCR, BTN SKT HD CAP 5/16-24 X 1.00	41
	-	1	1	1	1		-	690125-1	SHIM SUB-ASSY	39
	-	1	1	1	1		-	1-469367-0	SHIM	38
	-	1	1	1	1		-	879103-3	FINE ADJUST HEAD SUBASSY	37
	-	1	1	1	1		-	2-690786-3	TERMINAL SUPPORT	34
	-	2	2	2	2		-	2-21002-4	SCR, BTN SKT HD CAP 8-32 X .750	33
	-	1	1	1	1		-	21024-5	WASHER, SPRG LOCK, REG NO 10	32
	-	1	1	1	1		-	3-21000-4	SCR, SKT HD CAP 10-32 X .375	31
	-	1	1	1	1		-	1320908-1	SPACER, STRIP GUIDE	30
	-	1	1	1	1		-	1633091-2	ASSEMBLY, STRIP GUIDE	29
	-	1	1	1	1		-	455888-6	SPACER, CRIMPER	28
	-	1	1	1	1		-	1320928-1	PLATE, STRIP GUIDE	24
	-	1	-	-	1		-	690472-2	STRIPPER	22
	-	1	1	1	1		-	2-21000-7	SCR, SKT HD CAP 8-32 X .500	21
	-	4	4	4	4		-	21024-4	WASHER, SPRG LOCK, REG NO 8	20
	-	-	1	1	-		-	691353-1	STRIPPER	19
△1	-	1	-	-	-		-	679625-1	SHEAR HOLDER, FRONT (NO CUT)	17
	-	1	1	1	1		-	3-22280-3	SPRING, COMPRESSION	12
	-	1	1	1	1		-	690461-1	STOP, SHEAR	11
△1	-	-	1	1	1		-	690459-1	SHEAR HOLDER, FRONT	10
△1	-	1	1	1	1		-	1-454276-9	FLOATING SHEAR, FRONT	9
△1	1	1	1	1	1		-	5-662186-6	ANVIL, COMBINATION	8
	-	1	1	1	1		-	3-455889-3	DEPRESSOR, SHEAR	5
	-	1	1	1	1		-	238011-2	BLOCK, CRIMPER SPACER	4
△1	1	1	1	1	1		-	1-456135-4	CRIMPER, INSULATION O PREMIUM	3
	-	1	1	1	1		-	455888-4	SPACER, CRIMPER	2
△1	1	1	1	1	1		-	1-456405-3	CRIMPER, WIRE PREMIUM	1
	-77	-6	-3	-2	-1		U/M	PART NO	DESCRIPTION	ITEM NO

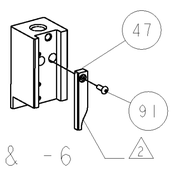

POST-FEED 1 5/8 STROKE

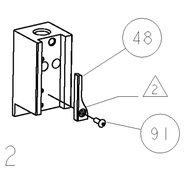

PRE-FEED 1 1/8 STROKE

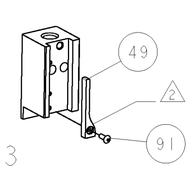

PRE-FEED 1 5/8 STROKE

THIS DRAWING IS A CONFIDENTIAL DOCUMENT FOR TYCO ELECTRONICS CORPORATION. IT IS SUBMITTED IN CONFIDENCE AND MAY NOT BE DISCLOSED TO ANY ORGANIZATION OUTSIDE THE TYCO ELECTRONICS CORPORATION WITHOUT WRITTEN CONSENT. CONTACT THE ORIGINATOR FOR THE LATEST REVISION.

DIMENSIONS: INCHES

TOLERANCES UNLESS OTHERWISE SPECIFIED:
0 PLC ±-
1 PLC ±0.1
2 PLC ±0.01
3 PLC ±0.001
4 PLC ±0.0001
ANGLES ±-

MATERIAL -
FINISH -

DWN	R KNEPPER	20MAR2006
CHK	T ELBIN	31MAR2006
APVD	T BENCHOFF	31MAR2006

PRODUCT SPEC -
APPLICATION SPEC -
WEIGHT -

tyco Electronics — Tyco Electronics, Harrisburg, PA 17105-3608

NAME: FINE ADJUST SIDE FEED HDM APPLICATOR -

SIZE	CAGE CODE	DRAWING NO	RESTRICTED TO
A1	00779	G-1855043	-

CUSTOMER DRAWING | SCALE 3:5 | SHEET 1 OF 1 | REV A

CUSTOMER VIEWABLE ASSEMBLY

AMP 4805 REV 31MAR2000

Pro/ENGINEER DRAWING