SIGN	DATE	DESCRIPTION	APPROVER

THIS IS CAD DRAWING, DO NOT REVISE MANUALLY!!!

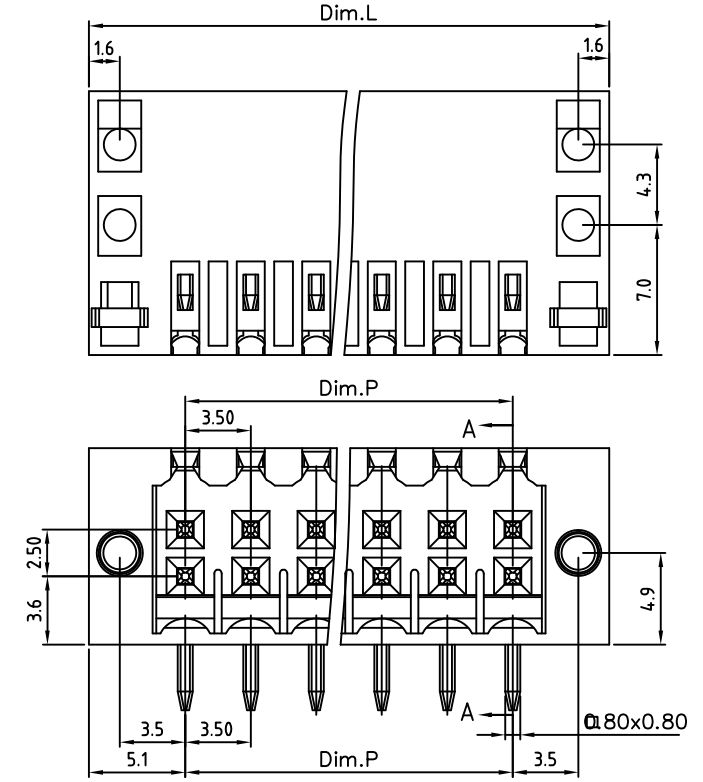

P.C.B Layout

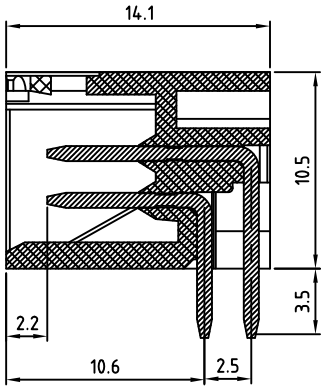

SECTION A–A

Material:

- Terminal housing: Thermoplastic (UL94V-0)
- Male contact long pin: Copper Tin plated
- Male contact short pin: Copper Tin plated
- With flange nut: Brass, Nickel plated. M2.0

Electrical: cULus

- Voltage rating: 150V
- Current rating: 7 A
- Withstanding Voltage: 1.3KV
- Operating temperature: -40°C to +115°C
- Soldering temperature: 250°C±10°C/5 Sec

RoHS Compliant

PART NUMBER:

OSTVXXX1201

No. of Poles
- 04: 2×02 Poles
- 06: 2×03 Poles
- : :
- 48 2×24 Poles

COLOR
- 0: Black (Standard)
- 5: Green
- 6: Blue
- 8: Grey

DimL=(N/2-1)×3.5+10.3
DimP=(N/2-1)×3.5

N=Number of poles

POLES \ Tol \ Dim.	Dim.L	Dim.P
2x2p-2x6p	±0.15	±0.10
2x7p-2x12p	±0.25	±0.20
2x13p-2x18p	±0.35	±0.30
2x19p-2x24p	±0.40	±0.35

THESE DRAWINGS AND SPECIFICATIONS ARE THE PROPERTY OF ON-SHORE TECHNOLOGY, INC. AND SHALL NOT BE REPRODUCED, COPIED OR USED IN ANY MANNER WITHOUT THE PRIOR WRITTEN CONSENT OF ON-SHORE TECHNOLOGY, INC.

ON-SHORE TECHNOLOGY, INC.

TITLE	OSTVX - 3.5mm Series with flange right-angle				
PART NO.	OSTVXXX1201			DWG NO.	OSTVXXX1201.DWG
APPROVED	CHECKED	DESIGNED	DRAWN	CUST NO.	
Shi Jun 2009.12.23	Marvin 2009.12.23	Marvin 2009.12.23	Marvin 2009.12.23	SHEET: 01/01	UNIT: mm SCALE: NONE REV.: A

Tolerance	
X.	±0.50
X.X	±0.30
X.XX	±0.10
X°	±1°