Alle Rechte vorbehalten/ *All rights reserved*

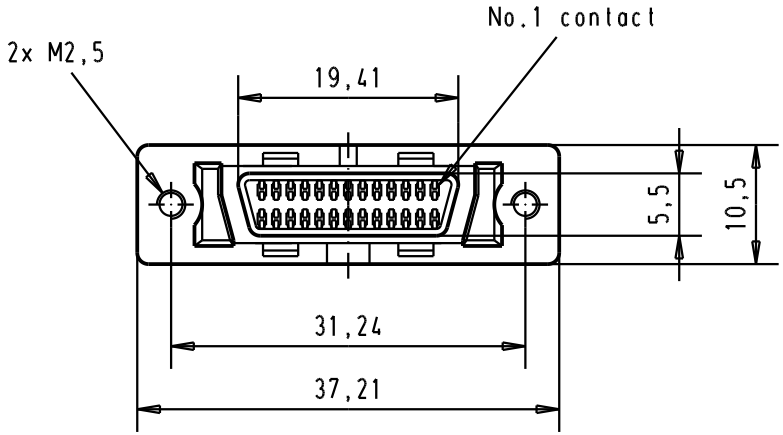

Printed board layout
Component side

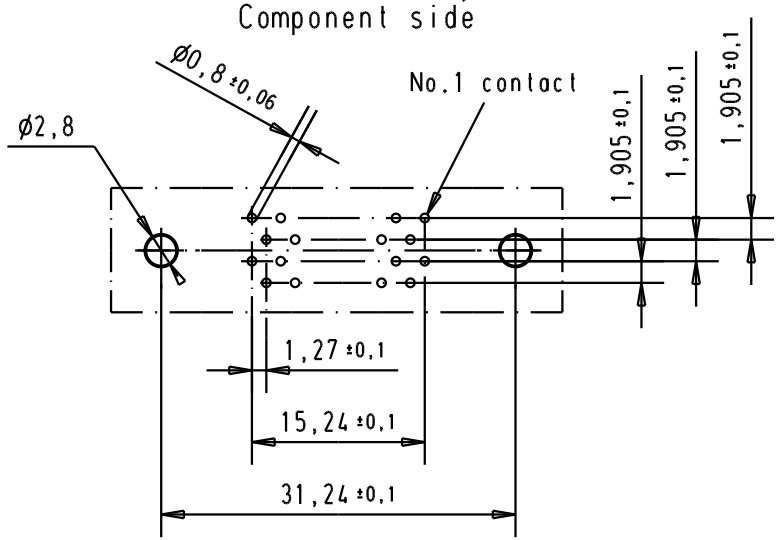

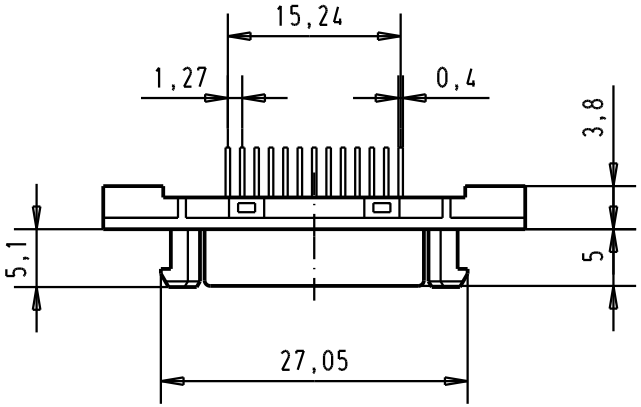

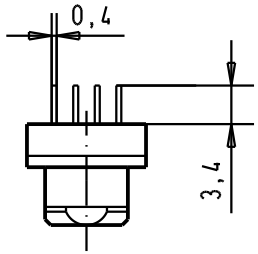

Pagos S4 plating
0.1 µmm Gold over 0.6µmm Palladium
over 1.5µmm Nickel

				Dat.	Name
			Detail.	30-AUG-00	JB
			Insp.		
			Stand.		
33101	19/09/05	AM			
27941	30-AUG-00	JB			
Mod.	Dat.	Name			

All Dim. in mm
Orig. Size DIN A 4

HARTING EURL
F-95972 Paris

har.mik ® I/O pin/socket
26 poles female connector
with straight solder pins
and fixed latching

Maßstab/ *Scale* 1,5:1

TB 60 01 026 5102

Sub.

Blatt/ *Page* 1/1