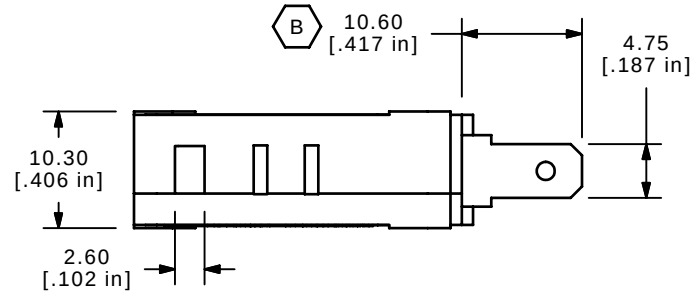

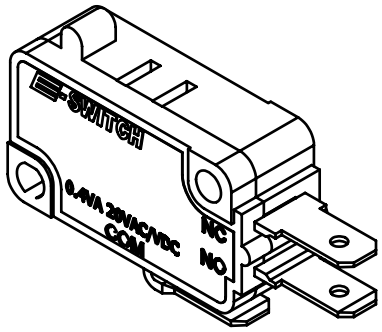

▲ O.P. (MM)	P.T. (MM)
14.7 ± 0.5	2.0 MAX.

O.P. = OPERATING POINT
P.T. = PRE-TRAVEL

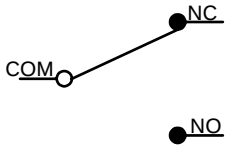

CIRCUIT: SPDT

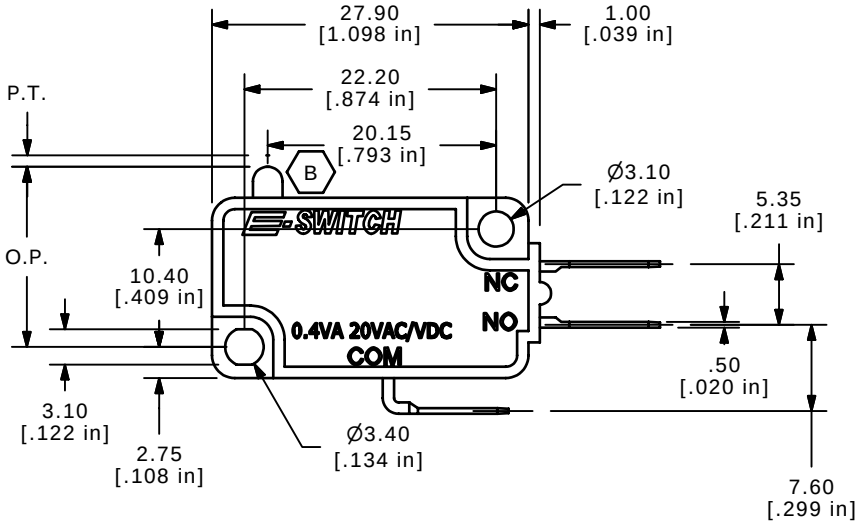

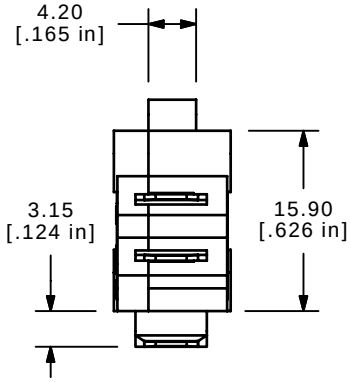

NOTES:
1. ALL DIMENSIONS IN MM [INCH]
2. GENERAL TOLERANCE: X.X=± 0.4
   X.XX=± 0.25
3. RATING: 0.4VA @20VAC OR DC
▲4. OPERATING FORCE: 100± 30 GRAMS
5. OPERATING TEMP: -25˚C TO 85˚C
6. ELECTRICAL LIFE: 50,000 CYCLES MIN.
7. MECHANICAL LIFE: 1,000,000 CYCLES TYP.
8. INSULATION RESISTANCE: 100 MEGA-OHMS MIN.
9. DIELECTRIC STRENGTH: 1500VAC 1 MINUTE (INITAL VALUE)
10. CONTACT RESISTANCE: 100 MILLI -OHMS MAX.
11. ▲ DENOTES CRITICAL PARAMETER.
▲12. CONTACTS: 10 MICRO INCHES MINIMUM GOLD PLATING (P/N Q990000)
13. 2002/95/EC (ROHS) COMPLIANT

REV	PCR NO	DESCRIPTION	DATE	BY
B	15632	CHANGES NOTED	12/21/05	PH
A	15586	RELEASED FOR PRODUCTION	12/7/05	PH

THE INFORMATION CONTAINED IN THIS DOCUMENT IS PROPRIETARY TO E-SWITCH AND IS NOT TO BE COPIED OR TRANSFERRED

E-SWITCH®

TITLE LS085R100F100C1A

SCALE	DATE	DR	DWG	REV
1.5:1	12/6/2005	AR	Q950023	B