REV.	DATE	ECR NO.	DESCRIPTION
NC	07/31/05	–	INITIAL RELEASE
A	03/05/09	–	ADD "75Ohms" TO PART DESCRIPTION

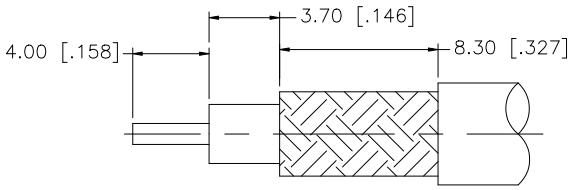

RECOMMENDED
CABLE STRIPPING DIM'S

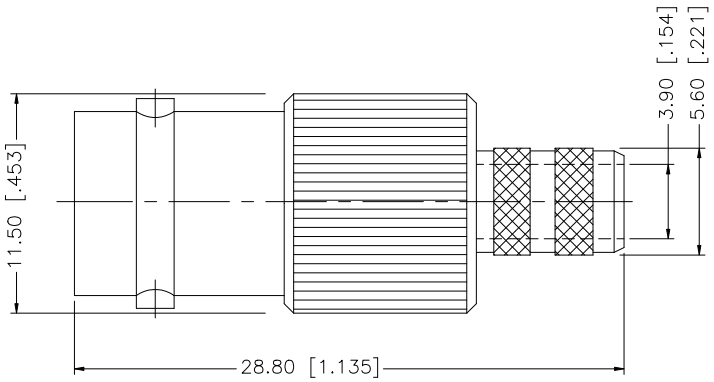

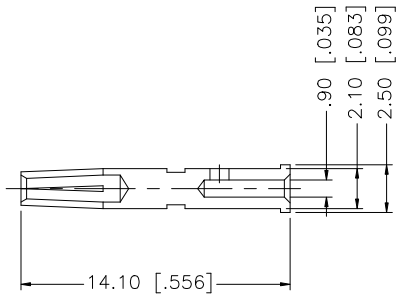

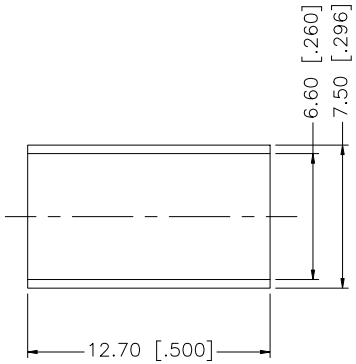

NOTES:

1. CRIMPED FERRULE HEX CRIMP SIZE .255" [6.48]
2. CRIMPED CONTACT PIN HEX CRIMP SIZE .068" [1.73]

	DESCRIPTION	MATERIAL	FINISH	QTY
8				
7				
6				
5				
4	FERRULE	COPPER	NICKEL	1
3	CONTACT PIN	PHOS. BRONZE	GOLD	1
2	INSULATOR	PTFE	NATURAL	1
1	HOUSING/BODY	BRASS	NICKEL	1

UNLESS OTHERWISE SPECIFIED DIMENSIONS ARE IN MILLIMETERS. DIMENSIONS IN [ ] ARE IN INCHES AND FOR CUSTOMER REFERANCE ONLY.

UNLESS OTHERWISE SPECIFIED TOLERANCES FOR MILLIMETERS ARE:
0.5 – 8mm ± 0.20mm
8 – 30mm ± 0.40mm
30 – 120mm ± 0.50mm

UNLESS OTHERWISE SPECIFIED TOLERANCES FOR INCHES ARE:
.020 – .315 = ± 0.007"
.315 – 1.180 = ± 0.015"
1.180 – 4.724 = ± 0.020"

DO NOT SCALE DRAWING

APPROVALS		DATE
DRAWN	GRS	03/05/09
CHECKED		
ISSUED		
SHEET	1 OF 1	
CAD FILE	C:/112/112649.DWG	

Amphenol Connex

PART DESCRIPTION: BNC CRIMP JACK, 75 Ohms

PART NO. 112649

DWG. NO. 112649.DWG | REV. A | SIZE A | SCALE NA