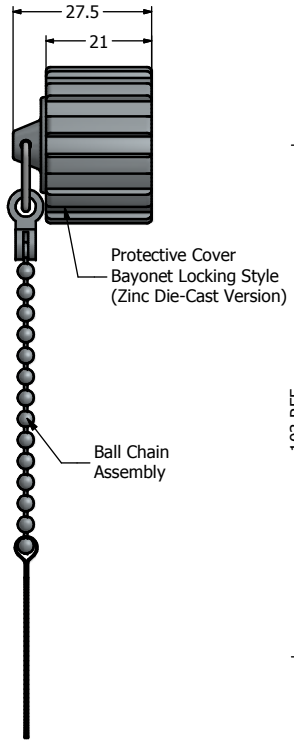

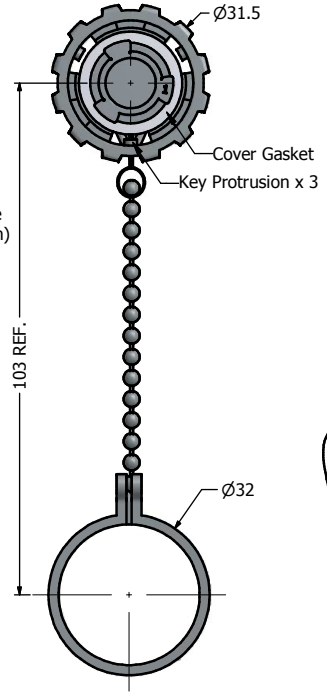

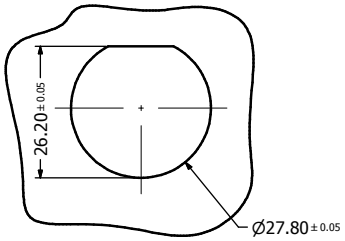

Recommended Single-D
Panel Cutout

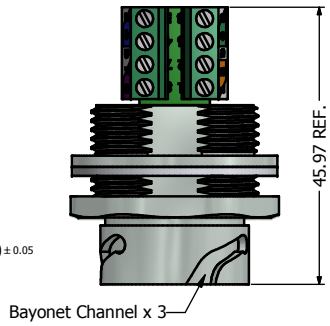

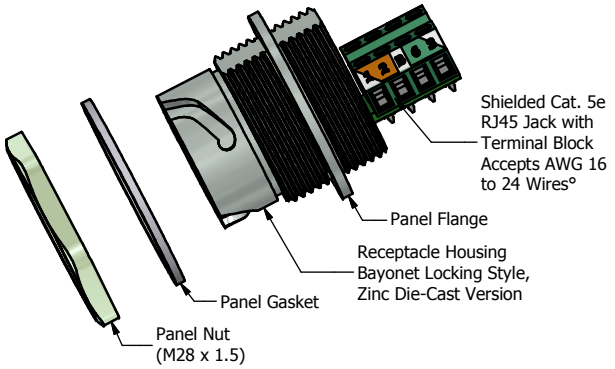

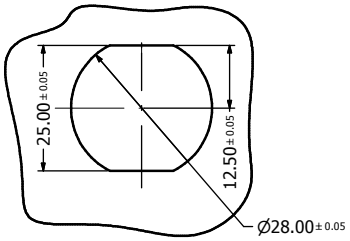

Recommanded Double-D
Panel Cutout

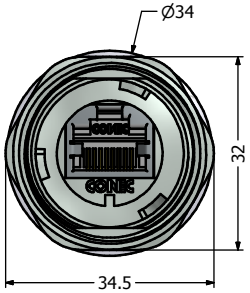

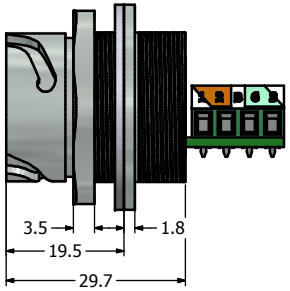

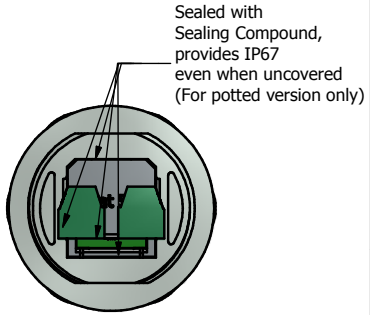

Notes:

1. Electrical Specifications:
   - Meets EIA/TIA-568-B.2 Cat.5e Specification
   - Contact Resistance: 20mOhm max.
   - Insulation Resistance: 500MOhm min. @ 100 VDC
   - Current Rating: 1.2A max. at 25°C
   - Working Voltage: 100 VDC
   - DWV: 1000 VDC/60s Contact to Contact, 1500 VDC/60s Contact to Metal Shell
   - Operating Temperature: -40°C to +85°C
2. Material and Finish:
   - Receptacle Housing, Protective Cover: Zinc Die-Cast, Nickel Plated
   - Panel Nut: Brass, Finish: Nickel Plated
   - Panel Gasket: Silicon, Color: White
   - Ball Chain Assembly: Copper Alloy and Stainless Steel, Nickel Plated
   - Cat.5e RJ45 Jack Metal Shell: Copper Alloy, Nickel Plated
   - Cat.5e RJ45 Jack Plastic Housing: Glass filled PBT UL94 V-0, Color: Black
   - Cat.5e RJ45 Jack Contacts: Phosphor Bronze, Finish: 50u" Gold min. over Nickel
   - PCB: FR-4
   - Terminal Block Insulator: Polyamide, UL94 V-0 Rated
   - Termnial: Brass, Tin Plated
   - Gage Clamp: Brass, Tin Plated
   - M2 Screw: Steel, Zinc Plated
3. Connector can be front or rear mounted to a maximum panel thickness of 3.2mm.
4. Potted Version must be used, if IP67 required when not capped or mated
5. Recommaned Mounting Panel Nut Torque is 20 to 25 lb-inch

Directive 2002/95/EC RoHS Compliant

Description	Part Number
Nickel Plated Zinc Die-Cast Version	17-110734
Potted Nickel Plated Zinc Die-Cast Version	17-110744

THIS DRAWING MAY NOT BE COPIED OR REPRODUCED IN ANY WAY OR ASSIGNED TO A THIRD PARTY WITHOUT WRITTEN PERMISSION. OWNERSHIP AND COPYRIGHT OF CONEC CORPORATION.

DO NOT ALTER CAD DRAWING BY HAND

Customer:

Name	Title	Approval Date

Rev.	Changes	Date	Name
a	original		

Tolerance
Unless otherwise specified
0 PLC ± 0.50
1 PLC ± 0.38
2 PLC ± 0.25
3 PLC ± 0.10
ANGLES ± 3°

Autodesk Inventor

	Date	Name
2012		
Draw.	Nov. 19	Vincent Ke
Appd.	Nov. 19	J. Chaudry
Norm		
D-old		

CONEC®

Scale: 1.5:1

Dim. in mm

Material: See Notes

Receptacle +Cover Assembly Kit
with Cat. 5e RJ45 Jack + Terminal Block
Nickel Plated Zinc Die-Cast Version

Drawing No.: 17K1A372

DIN A3

Part No.: SEE PART NUMBER TABLE

Sheet 1/1