THIS DRAWING IS UNPUBLISHED. RELEASED FOR PUBLICATION 20
© COPYRIGHT 20 BY - ALL RIGHTS RESERVED.

LOC	DIST
DY	-

REVISIONS

P	LTR	DESCRIPTION	DATE	DWN	APVD
	C2	REVISED PER ECR-16-011040	2AUG2016	S.W	W.H

NOTES:

1. MATERIAL:
   HOUSING: HIGH TEMP THERMOPLASTIC, UL94 V-0, BLACK
   CONTACT: COPPER ALLOY
   SOLDER PEG: COPPER ALLOY
2. FINISH:
   CONTACT : "A" MIN GOLD PLATING AT MATING SIDE AND 2.54µm MIN TIN PLATING AT SOLDER TAIL WITH 1.27µm MIN NICKEL UNDERPLATING ALL OVER.
   SOLDER PEG: 2.54µm MIN TIN PLATING WITH 1.27µm MIN NICKEL UNDERPLATING ALL OVER.
3. CO-PLANARITY TO BE 0.1mm MAX AFTER 2 PASS REFLOW, PEAK 245 DEGREE CELSIUS

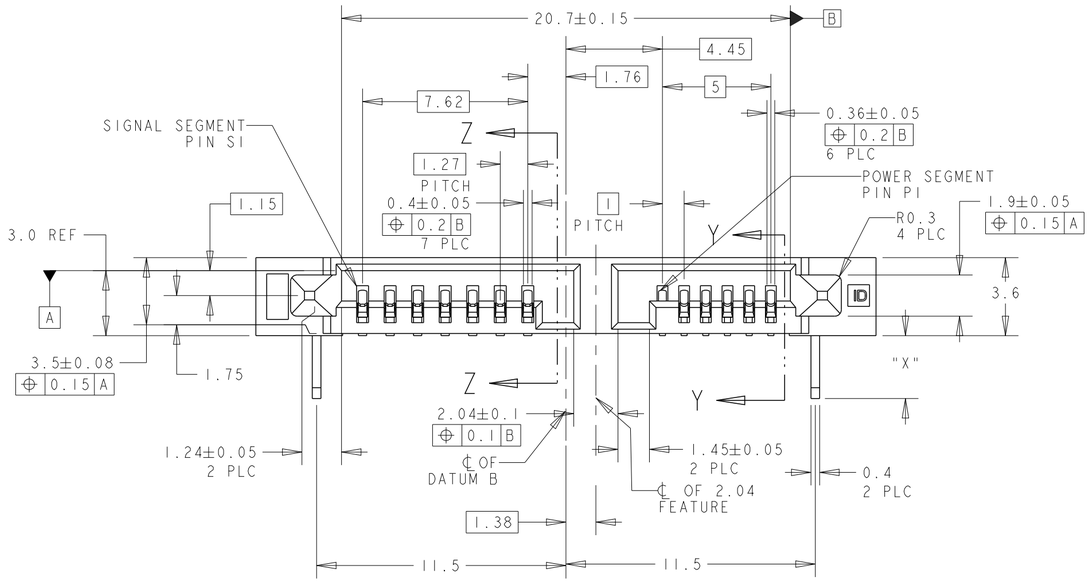

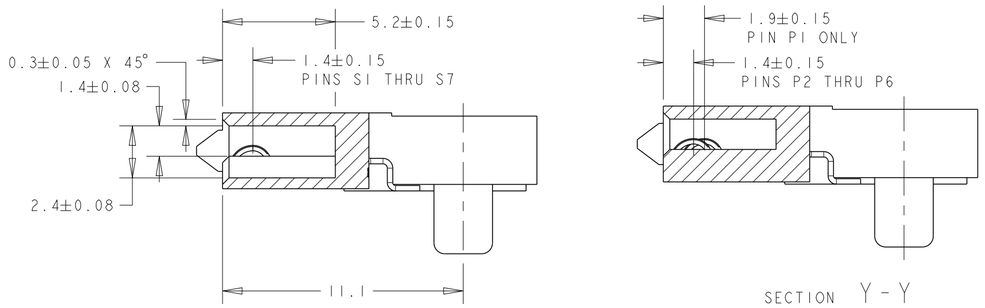

SECTION Z-Z
SCALE 5:1

SECTION Y-Y
SCALE 5:1

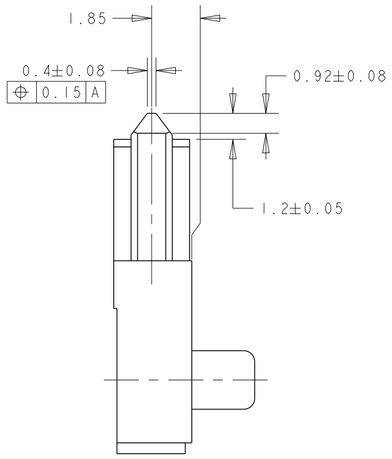

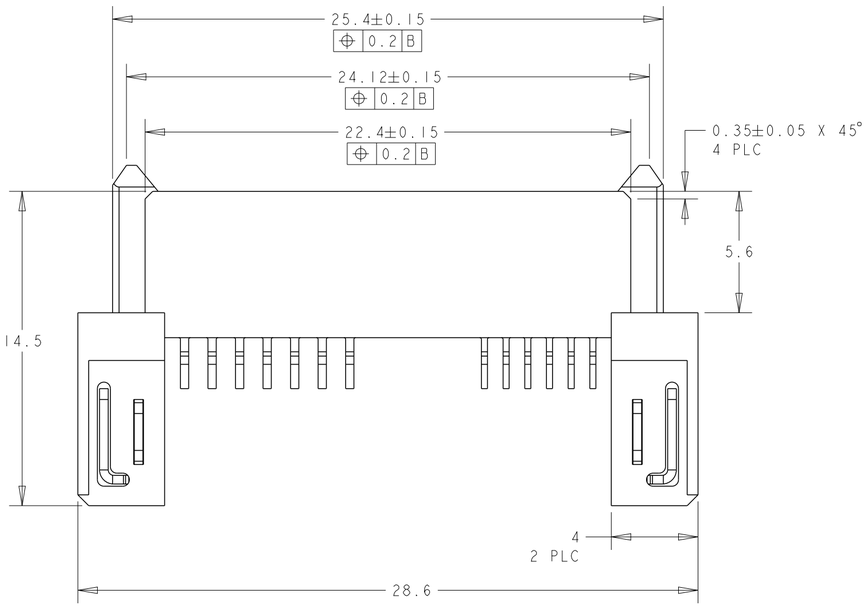

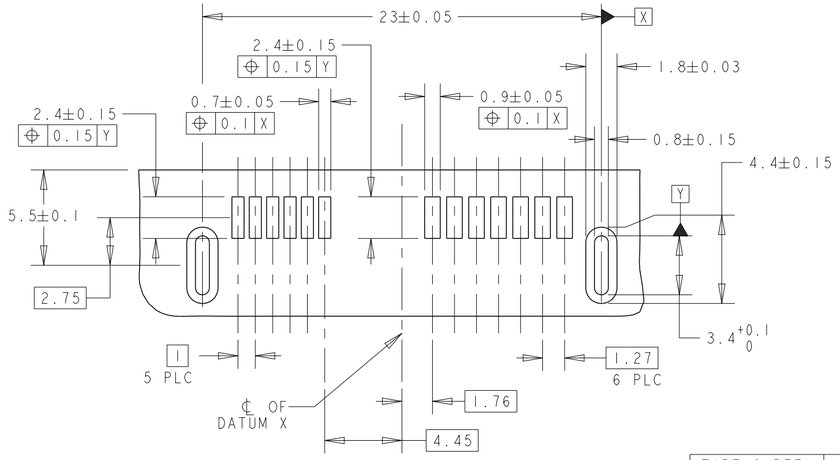

RECOMMENDED PCB LAYOUT

OBSOLETE	TAPE & REEL	2.9	0.76µm	1-1735413-3
			0.38µm	1-1735413-2
			0.05µm	1-1735413-1
	TRAY	1.8	0.76µm	1735413-3
			0.38µm	1735413-2
			0.05µm	1735413-1
	PACKAGING TYPE	"X"	"A"	PART NUMBER

THIS DRAWING IS A CONTROLLED DOCUMENT.

DIMENSIONS: mm

TOLERANCES UNLESS OTHERWISE SPECIFIED:
0 PLC ±-
1 PLC ±0.20
2 PLC ±0.20
3 PLC ±0.20
4 PLC ±0.20
ANGLES ±1°

MATERIAL 1 -
FINISH 2 -

DWN KW YAP 09SEP2007
CHK SF LEONG
APVD SF LEONG
PRODUCT SPEC 108-51075
APPLICATION SPEC -
WEIGHT -

TE Connectivity

NAME - SLIMLINE SATA RECEPTACLE 7P+6P RIGHT ANGLE, SMT

SIZE	CAGE CODE	DRAWING NO	RESTRICTED TO
A2	00779	C-1735413	-

CUSTOMER DRAWING SCALE 4:1 SHEET 1 OF 1 REV C2