PACKAGE OUTLINE

BRIDGE

DB

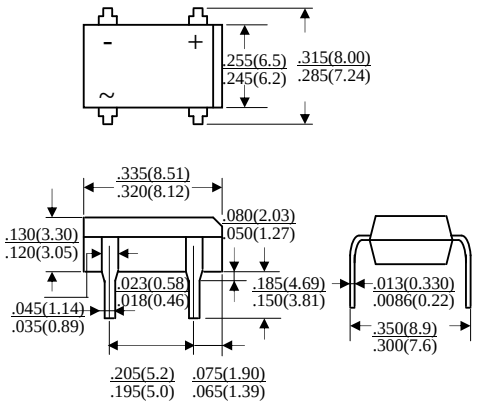

Dimensions in inches and (millimeters)

DBS

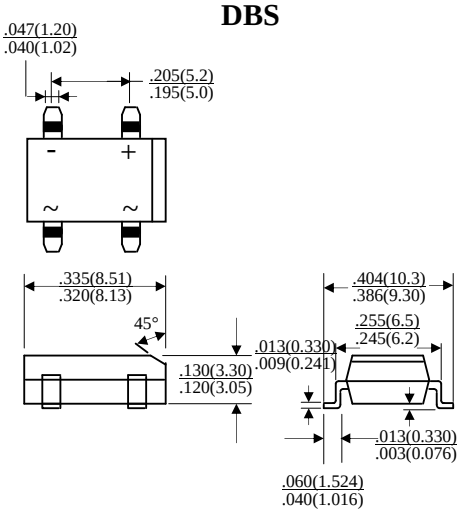

Dimensions in inches and (millimeters)

MDBS

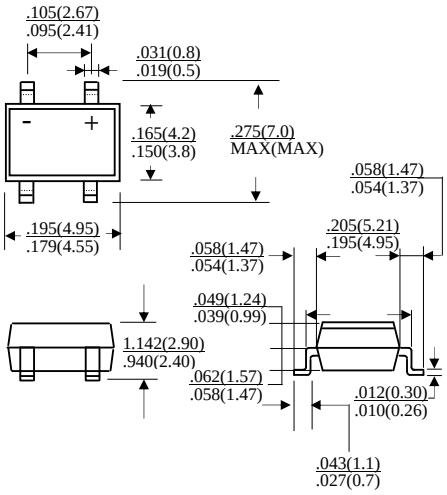

Dimensions in inches and (millimeters)

WOM

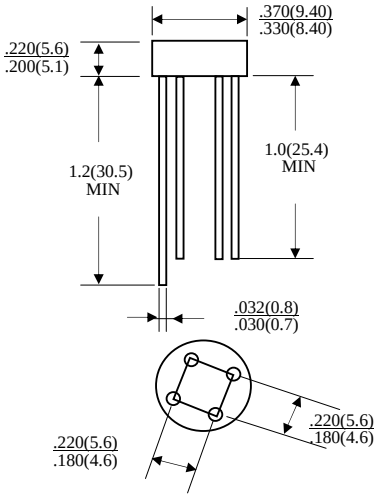

Dimensions in inches and (millimeters)