SHEET OF

NOTES:
1. ALL DIMENSION IN MM [INCH]
2. GENERAL TOLERANCE: X.X=±0.4
   X.XX=±0.25
3. TERM. NOS. FOR REF. ONLY
4. CONTACT RATING SWITCHING: 150mA, 250V AC/DC
   350mA, 110V AC/DC
5. OPERATING FORCE: 425±100 CM/STANDARD
6. OPERATING TEMP: −30° to 85°C
▲ 7. CIRCUIT DP: 6 POSITIONS, 30° INDEX.
8. DIELECTRIC STRENGTH: 1000V RMS min. @SEA LEVEL
▲ 9. DESIGNATE MAJOR DIMENSIONS
▲ 10. HARDWARE SUPPLIED ON SWITCH− SEE BELOW
   STOPRING, LOCKWASHER, & HEXNUT

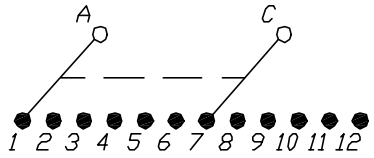

CONTACT CONFIGURATION
TIMING: NON−SHORTING (BBM)

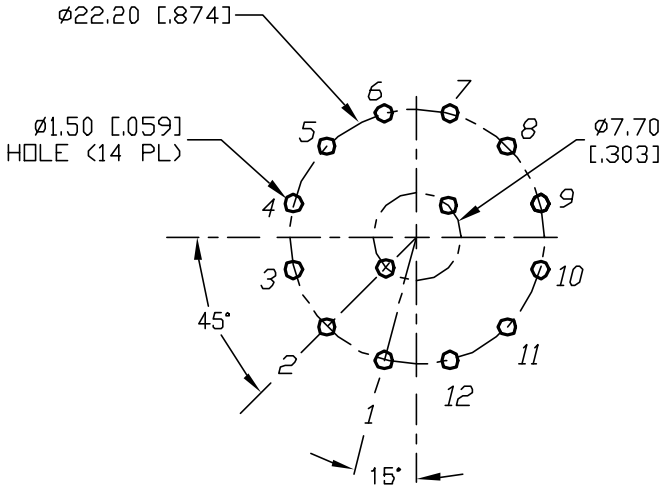

RECOMMENDED P.C.B. LAYOUT

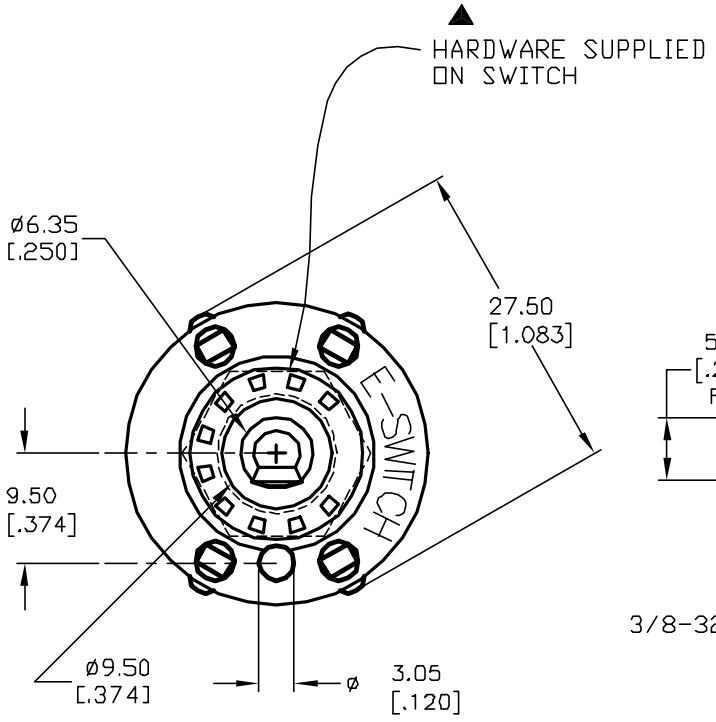

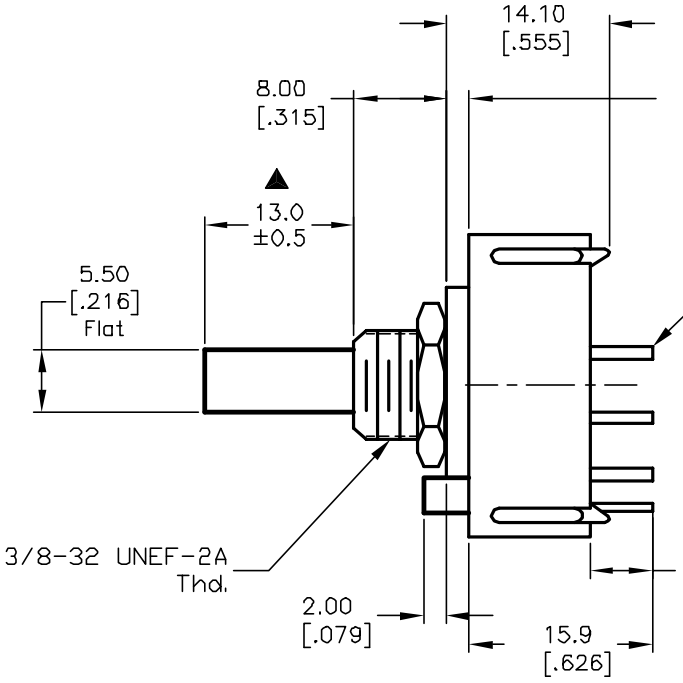

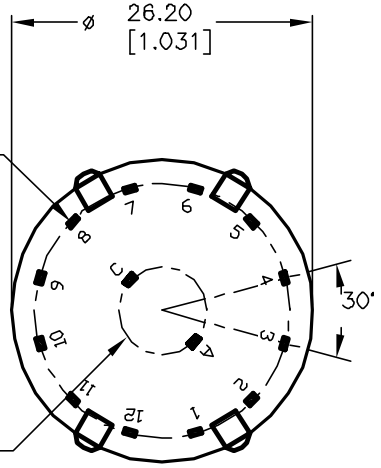

REV.	ECN No.	DESCRIPTION	DATE	CHKD
B	12821	REVISED NOTE 10	3/5/03	CJB
A	12361	RELEASED FOR PRODUCTION	8/12/02	CJB

THE INFORMATION CONTAINED IN THIS DOCUMENT IS PROPRIETARY TO E-SWITCH AND IS NOT TO BE COPIED OR TRANSFERRED

E-SWITCH®

TITLE: KC-26-A-(13.0mm) 01-N-P-S

SCALE	DATE	DR	DWG	REV
1.5:1	8/12/02	CJB	G510451	B