DRAWING MADE IN THIRD ANGLE PROJECTION

680305 680305

/home/us016926/DMTECmod

PART NUMBER	REV	FIRST USED
680305	B	122500-1
680305	B	565435-5
680305	B	354500-1

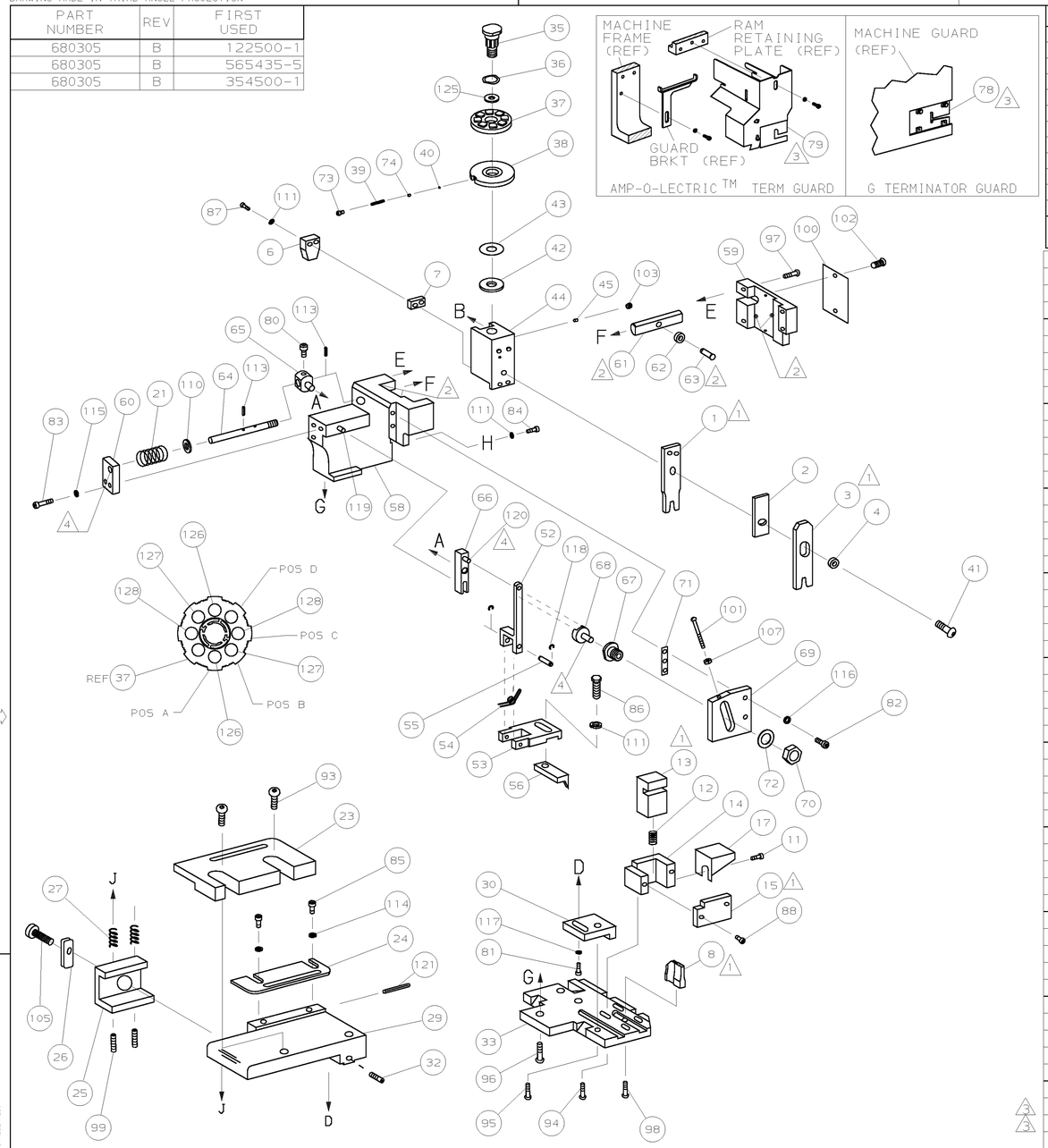

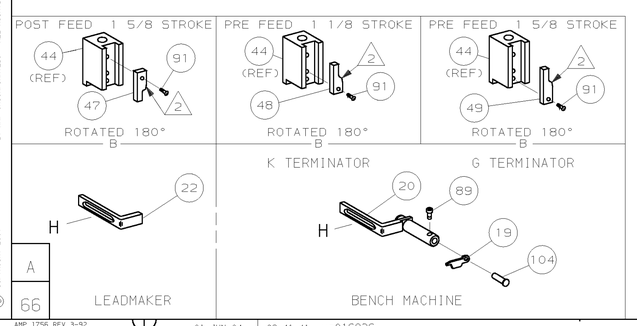

1. RECOMMENDED SPARE PARTS.
2. GREASE LIGHTLY.
3. GUARD MUST BE IN PLACE WHEN OPERATING APPLICATOR IN A BENCH MACHINE.
4. LUBRICATE DAILY USING NO. 20 MACHINE OIL.
5. ITEMS WITH QTY OF REF SPECIFIED (EXCEPT ITEMS 78 AND 79) ARE USED ON ITEM 46.

TERMINAL NAME: RECEPTACLE

AMP P/N	MFG P/N
356324	02965580

CRIMPING DATA

PAD LTR	CRIMP HEIGHT	WIRE SIZE
A	.118 ±.002 [3.00 ±0.05mm]	10
B	.100 ±.002 [2.54 ±0.05mm]	12
C	.090 ±.002 [2.29 ±0.05mm]	14
D	NOT	USED

CRIMP	SIZE	TYPE	RANGE
WIRE	.140 [3.56mm]	F	14-10
INSUL	.200 [5.08mm]	F	ø.195 MAX

WIRE STRIP LENGTH	TERM APPL SPEC	FEED	APPL INSTRUCTION	SET UP GAGE	LAYOUT
–	NONE	.795	408-8040	458637-1	L1766

-3	-2	-1	U/M	DWG SIZE	PART NO	DESCRIPTION	ITEM NO
							129
2	2	2	–	C	7-354778-1	PIN, WIRE DISC (.2850)C	128
2	2	2	–	C	5-354778-1	PIN, WIRE DISC (.2750)B	127
2	2	2	–	C	1-354778-5	PIN, WIRE DISC (.2570)A	126
1	1	1	–	A	986950-1	WASHER, FLAT PRECISION	125
1	1	1	–	A	217238-1	GENERAL INSTRUCTION PACKAGE	124
1	1	1	–	–	4088040	SF APPL INST 408-8040	123
							122
1	1	1	–	A	4-21028-0	PIN,SLT SPR(ø.093x.75)ST GDE PL	121
REF	REF	REF	–	A	1-21030-1	PIN,DOWEL(ø.187x.50)LEVER	120
REF	REF	REF	–	A	1-21030-6	PIN,DOWEL(ø.187x1.25)HOUSING	119
REF	REF	REF	–	A	21045-3	RING,RET "C"(ø.187)FD FING PIN	118
1	1	1	–	A	21024-5	WASHER, LOCK(#10)ADJ BLOCK	117
REF	REF	REF	–	A	21024-5	WASHER,LOCK(#10)ADJ PLATE	116
REF	REF	REF	–	A	21024-5	WASHER,LOCK(#10)FEED GDE ROD	115
2	2	2	–	A	21024-2	WASHER,LOCK(#4)FRONT STP GUIDE	114
REF	REF	REF	–	A	5-21028-1	PIN,SLT SPR(ø.125x.50)ADJ ROD	113
							112
4	4	4	–	A	21024-4	WASHER,LOCK(#8)STRIPPER	111
REF	REF	REF	–	A	21899-4	WASHER,FLAT(ø5/16)SCREW ADJ	110
							109
							108
REF	REF	REF	–	A	21018-5	NUT,HEX(6-32)FEED ADJ	107
							106
1	1	1	–	A	22353-8	SCR,SHLD(ø.187x.25)DRAG LEVER	105
1	1	–	–	A	992031-1	PIN, CLEVIS	104
1	1	1	–	A	21009-2	SCR,SKT SET(1/4-20x.25 LW)RAM	103
2	2	2	–	A	21017-2	SCR,DRIVE(#2x.19)ID PLATE	102
REF	REF	REF	–	A	6-23715-5	SCR,PAN HD(6-32x1.50)FEED ADJ	101
1	1	1	–	B	461264-1	PLATE, IDENTIFICATION	100
2	2	2	–	A	5-21006-6	SCR,SET(10-32x.75)DRAG	99
1	1	1	–	A	22733-8	SCR,BHC(8-32x.38 LW)ANVIL	98
REF	REF	REF	–	A	2-21002-9	SCR,BHC(10-32x.75)CAP	97
REF	REF	REF	–	A	2-22733-8	SCR,BHC(1/4-20x.62)HOUSING	96
REF	REF	REF	–	A	2-21002-7	SCR,BHC(10-32x.50)SG ADJ BLOCK	95
4	4	4	–	A	2-21002-2	SCR,BHC(8-32x.50)TERM H DWN	94
2	2	2	–	A	1-21000-7	SCR, SHC 4-40 x .75	93
							92
1	1	1	–	A	1-21002-7	SCR,BHC(6-32x.38)CAM	91
							90
1	1	–	–	A	7-21000-9	SCR,SHC(4-40x.19)STRIPPER	89
2	2	2	–	A	1-21000-8	SCR,SHC(6-32x.25)R SHEAR PLATE	88
2	2	2	–	A	2-21000-9	SCR,SHC(8-32x.75)DEP-HOLD	87
1	1	1	–	A	2-22603-0	SCR,HEX HD(8-32x.31)FEED FINGER	86
2	2	2	–	A	1-21000-3	SCR,SHC(4-40x.25)F ST GUIDE	85
1	1	1	–	A	2-21000-7	SCR,SHC(8-32x.50)STRIPPER	84
REF	REF	REF	–	A	3-21000-7	SCR,SHC(10-32x.75)FEED ROD GD	83
REF	REF	REF	–	A	3-21000-6	SCR,SHC(10-32x.62)FD ADJ BLK	82
1	1	1	–	A	3-21000-4	SCR,SHC(10-32x.38)SG ADJ BL	81
REF	REF	REF	–	A	3-21000-4	SCR,SHC(10-32x.38)PIVOT BLK	80
–	REF	–	–	B	455749-1	GUARD, WINDOW	79
REF	–	–	–	B	679532-1	INSERT, GUARD	78
							77
							76
							75
1	1	1	–	A	690603-1	SPRING, ASSIST	74
1	1	1	–	A	23030-1	SCR,SHC(6-32x.25 SL)INS DISC	73
REF	REF	REF	–	A	458109-1	WASHER, SPECIAL	72
REF	REF	REF	–	A	690517-1	SPACER	71

QTY REQD PER ASSY — PARTS LIST

-1	-2	-3					
LEADMAKER					MECH POST FEED		
BENCH MODEL K					MECH PRE FEED		
BENCH MODEL G					MECH PRE FEED		
REF	REF	REF	–	B	22594-8	NUT,HEX(1/2-20)	70
REF	REF	REF	–	B	240628-1	PLATE, ADJUSTMENT	69
REF	REF	REF	–	B	240626-1	SHAFT, PIVOT	68
REF	REF	REF	–	B	240633-1	BUSHING	67
REF	REF	REF	–	A	455680-1	LEVER, INTERMEDIATE	66
REF	REF	REF	–	B	240629-1	BLOCK, PIVOT	65
REF	REF	REF	–	A	240632-2	SCREW, ADJ FEED ROD	64
REF	REF	REF	–	B	240659-3	PIN, CAM ROLLER	63
REF	REF	REF	–	B	240658-1	ROLLER, CAM	62
REF	REF	REF	–	B	454398-2	ROD, FEED	61
REF	REF	REF	–	A	454178-1	GUIDE, FEED ROD	60
REF	REF	REF	–	C	454220-1	CAP, RAM	59
REF	REF	REF	–	D	454485-1	HOUSING	58
							57
1	1	1	–	B	694433-9	PAWL, FEED	56
REF	REF	REF	–	B	240624-1	PIN, FEED FINGER	55
REF	REF	REF	–	B	691499-1	SPRING, FEED FINGER	54
REF	REF	REF	–	B	690541-1	HOLDER, FEED FINGER	53
REF	REF	REF	–	A	455679-1	LEVER, TERMINAL FEED ARM	52
							51
							50
1	–	–	–	B	690602-6	CAM, PRE-FEED 1 5/8 ST	49
–	1	–	–	B	690602-5	CAM, PRE-FEED 1 1/8 ST	48
–	–	1	–	B	690501-4	CAM, POST-FEED 1 5/8 ST	47
1	1	1	–	B	459456-1	APPLICATOR, BASIC (SUBASSY)	46
1	1	1	–	A	690191-1	PLUG, NYLON	45
1	1	1	–	C	455673-1	RAM	44
1	1	1	–	A	690125-1	WASHER, LAMINATED	43
1	1	1	–	A	1-690124-0	WASHER, RAM	42
1	1	1	–	A	7-21002-9	BOLT, CRIMPER(5/16x1.00)	41
1	1	1	–	A	23241-6	BALL, STEEL	40
1	1	1	–	A	690170-1	SPRING, COMPRESSION	39
1	1	1	–	C	690142-1	DISC, INSULATION	38
1	1	1	–	D	354777-1	WIRE DISC, PLASTIC	37
1	1	1	–	A	22480-5	WASHER, SPRING	36
1	1	1	–	B	690212-1	POST, RAM	35
							34
REF	REF	REF	–	D	455675-1	PLATE, BASE	33
1	1	1	–	A	690432-3	SCREW, ADJUSTMENT	32
							31
REF	REF	REF	–	B	455689-1	BLOCK, STRIP GUIDE ADJ	30
1	1	1	–	C	1-844048-1	PLATE, STRIP GUIDE	29
							28
2	2	2	–	A	1-22284-0	SPRING, DRAG	27
1	1	1	–	B	240793-1	LEVER, DRAG RELEASE	26
1	1	1	–	B	240792-1	DRAG, TERMINAL	25
1	1	1	–	D	690438-1	GUIDE, STRIP (REAR)	24
1	1	1	–	A	189124-4	GUIDE, STRIP (FRONT)	23
–	–	1	–	B	690472-2	STRIPPER	22
REF	REF	REF	–	A	4-22284-9	SPRING, FEED RETURN	21
1	1	–	–	A	679218-1	STRIPPER WIRE STOP ASSY	20
1	1	–	–	B	458949-1	STRIPPER	19
							18
1	1	1	–	A	691668-1	GUARD, CHIP (REAR)	17
							16
1	1	1	–	B	690464-1	PLATE, SHEAR (REAR)	15
1	1	1	–	B	690462-1	HOLDER, SHEAR (REAR)	14
1	1	1	–	C	690463-6	SHEAR, FLOAT (REAR)	13
1	1	1	–	A	5-22280-0	SPRING, SHEAR	12
1	1	1	–	B	690461-1	STOP, SHEAR	11
							10
							9
1	1	1	–	C	8-189717-2	ANVIL	8
1	1	1	–	C	5-240641-6	SPACER, DEPRESSOR (REAR)	7
1	1	1	–	A	690468-7	DEPRESSOR, SHEAR (REAR)	6
							5
1	1	1	–	B	238009-4	SPACER, BLOCK CRIMPER	4
1	1	1	–	C	2-456134-5	CRIMPER, INSULATION	3
1	1	1	–	C	1-455888-7	SPACER, CRIMPER	2
1	1	1	–	C	456411-3	CRIMPER, WIRE	1

-3	-2	-1	U/M	DWG SIZE	PART NO	DESCRIPTION	ITEM NO

← REVISION OF EACH ASSY NO (WHEN BLANK, USE DWG REVISION)

QTY REQD PER ASSY — PARTS LIST

P	F	LTR	REVISION RECORD	APP	DATE
		B1	ECN 0150-0723-04	TE	6-04
		B	ECN 0150-0849-01	TE	10-01
		A1	0150-7793-97	TB	6-97
		A	REVISED	TB	8/96

DIMENSIONS IN INCHES.
DO NOT SCALE PRINT.
TOLERANCES UNLESS OTHERWISE SPECIFIED:
2 PLC DEC ±–
3 PLC DEC ±–
4 PLC DEC ±–
ANGLES ± –
SURF TEXTURE: √
REMOVE BURRS, BREAK SHARP EDGES R.015 MAX

MATL – – HT TR – – FIN – –

DR 16-MAY-96 M. OBRINE APP 5-16-96 T. ELBIN
CHK 5-16-96 C. ERISMAN REL – –

AMP Incorporated Harrisburg, PA 17105-3608

NAME SIDE FEED HDM APPLICATOR
MACHINE REF MINI APPL
SCALE – D DWG NO 680305 SHEET 1 OF 1 REV B1

CAGE CODE 00779 CUSTOMER AND ASSEMBLY DRAWING RESTRICTED TO –

THIS DRAWING IS A CONTROLLED DOCUMENT.
RELEASED FOR PUBLICATION: 10OCT.2001
BY AMP INCORPORATED. ALL RIGHTS RESERVED.
© COPYRIGHT 2001

A 66

AMP 1756 REV 3-92 01-JUN-04 08:41:41 us016926