SHEET OF

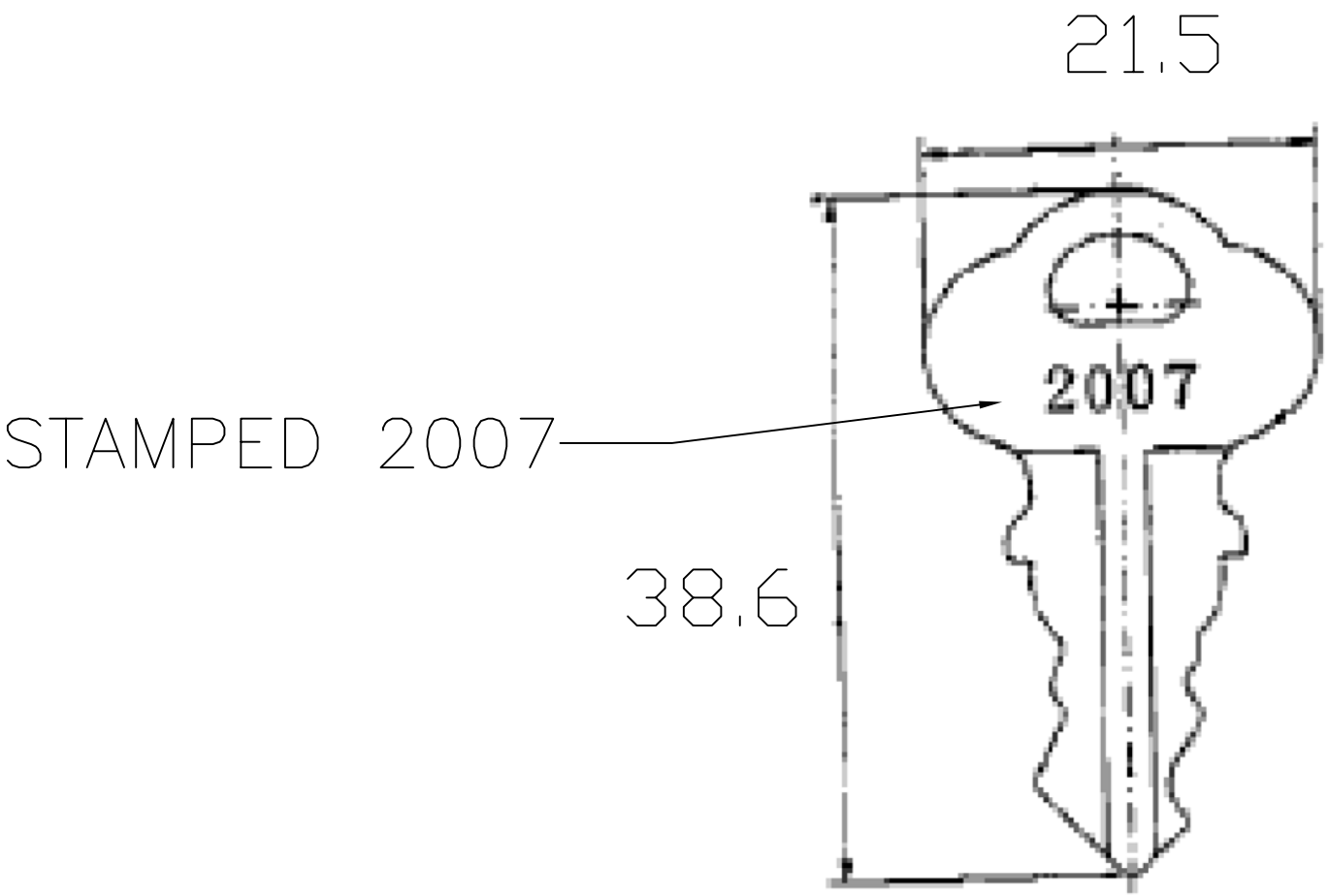

NOTES:

1. ALL DIMENSIONS IN MM
2. GENERAL TOLERANCE: X.X=±0.4
   X.XX=±0.25
3. MATERIAL: ZINC ALLOY W/NICKLE PLATE.

REV.	ECN No.	DESCRIPTION	DATE	CHKD
B	15567	CHANGED TO NEW DRAWING	11/29/05	PH
A	13815	RELEASED FOR PRODUCTION	3/3/04	AR

THE INFORMATION CONTAINED IN THIS DOCUMENT IS PROPRIETARY TO E-SWITCH AND IS NOT TO BE COPIED OR TRANSFERRED

E-SWITCH®

TITLE				
K0KEY2007				
SCALE	DATE 3/3/04	DR AR	DWG K900014	REV B