Alle Rechte vorbehalten/ *All rights reserved*

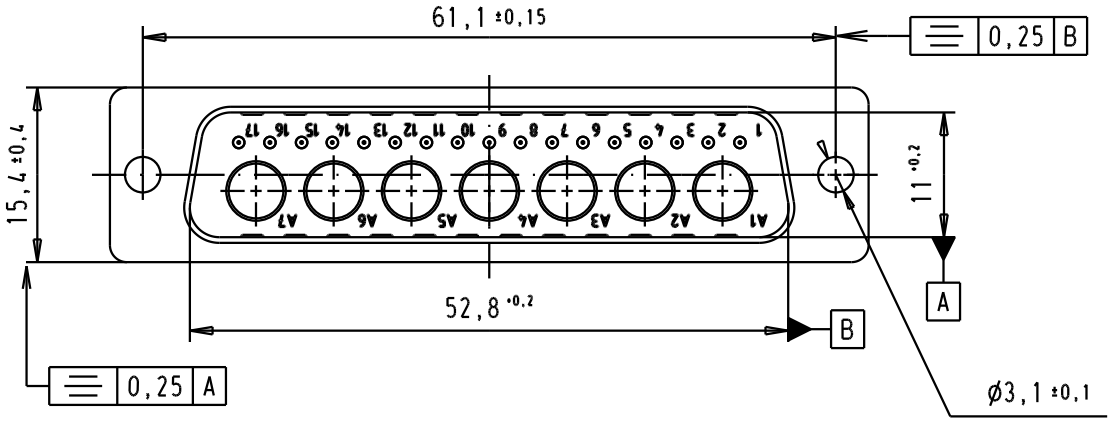


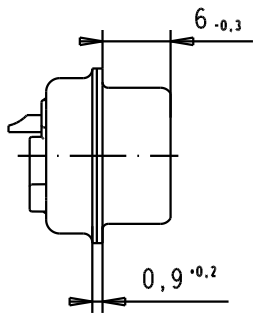


Solder bucket termination For AWG 20

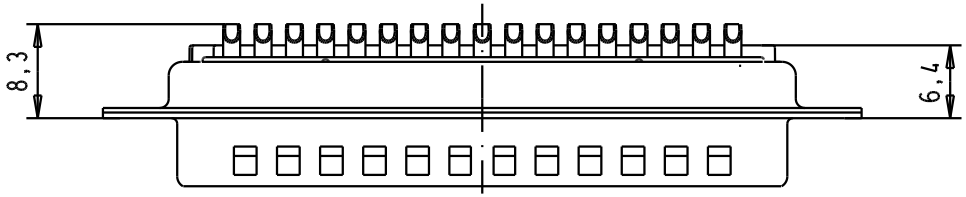


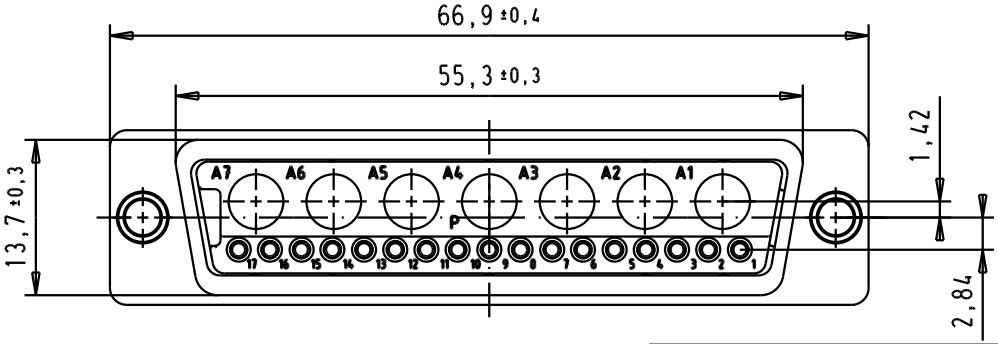


| | |
|---|---|
| 09 69 511 7247 | PL3 |
| 09 69 511 5247 | 0,76 µm Au |
| Part number | Plating |

| Mod. | Dat. | Name |
|---|---|---|
| 33421 | 06/02/06 | JMDR |
| 31890 | 21/04/04 | JH |

| | Dat. | Name |
|---|---|---|
| Detail. | 21/04/04 | JH |
| Insp. | | |
| Stand. | | |

All Dim. in mm
Orig. Size DIN A 4

D-sub, male, straight, 24W7 without power contact, solder buckets, tin plated shell with dimples and holes

Maßstab/ *Scale* 1,5:1

HARTING EURL
F-95972 Paris

TB 09 69 511 X247

Sub.

Blatt/ *Page* 1/1